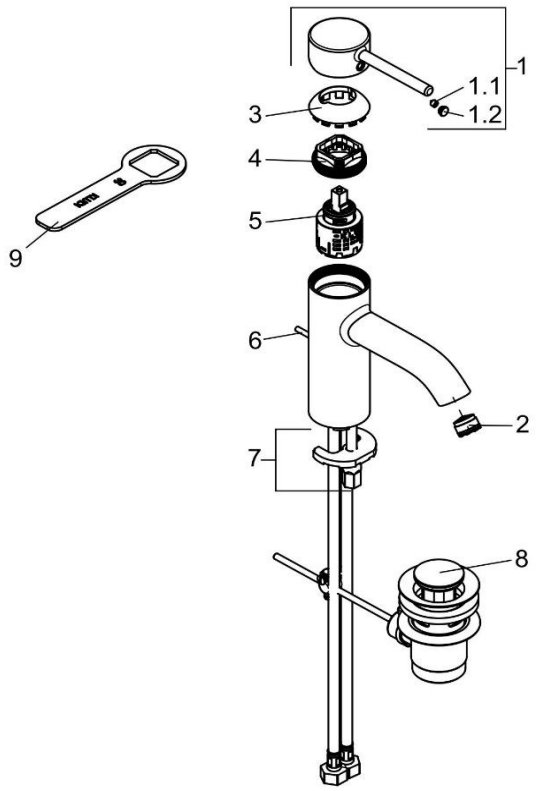


| 382700576 | | Waschtisch- Einhandmischer DN15 | single lever basin mixer |
|---|---|---|---|
| 1 | 7371505-00 | HEBEL BOZZ | LEVER BOZZ |
| 1.1 | 92204601-00 | GEWINDESTIFT | GRUB SCREW |
| 1.2 | 93019705-00 | STOPFEN | PLUG |
| 2 | 7509300-00 | STRAHLREGLER | AERATOR |
| 3 | 93036805-00 | ABDECKKAPPE | COVER CAP |
| 4 | 93033300-00 | SPANNSCHRAUBE | FASTENING SCREW |
| 5 | 7560700-00 | STEUEREINHEIT | CERAMIC CARTRIDGE |
| 6 | 91701505-00 | ZUGSTANGE | LIFT ROD |
| 7 | 7330000-00 | BEFESTIGUNGSSATZ | MOUNTING KIT |
| 8 | 7654505-00 | ABLAUFGARNITUR | POP UP WASTE |
| 9 | 92914900-00 | SPANNSCHRAUBENSCHLÜSSEL | WRENCH FOR FASTENING SCREW |
| | | | |
| | | | |
| | | | |
| | | | |
| | | | |
| | | | |
| | | | |
| | | | |
| | | | |
| | | | |